TH-T-FW10AD-A

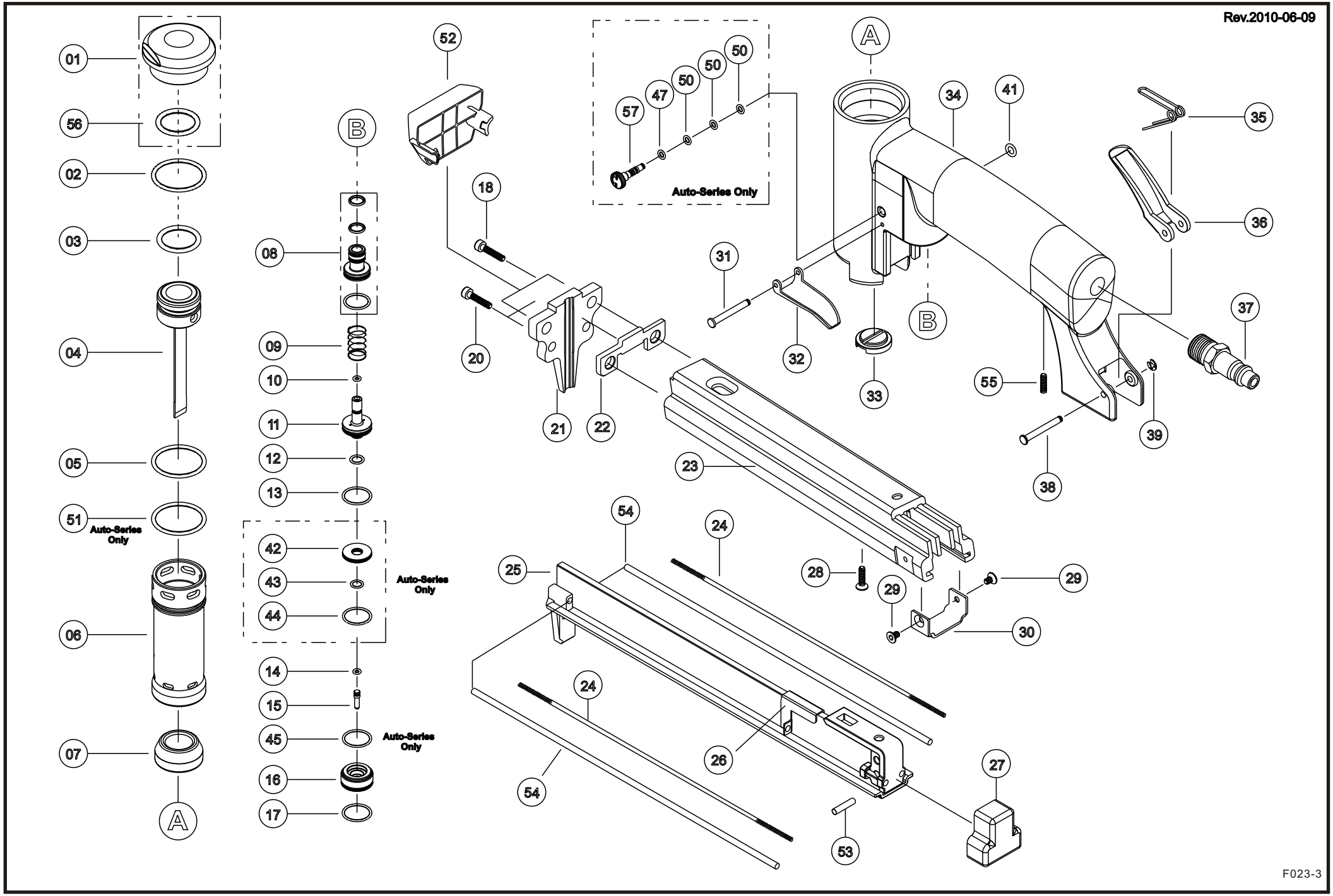
Rev.2010-06-09
01
56
02
03
04
05
51
Auto-Series Only
06
07
A
B
08
09
10
11
12
13
42
43
44
Auto-Series Only
14
15
45
Auto-Series Only
16
17
52
18
20
21
22
23
24
25
26
27
28
29
30
31
32
33
34
35
36
37
38
39
41
47
50
50
50
57
Auto-Series Only
53
54
54
55
F023-3